FALLTECH®

Product Specifications

7712

Beam Trolley Anchor

The FallTech™ Beam Trolley is a lightweight mobile anchorage connector solution for use in Personal Fall Arrest Systems. Positioned anywhere along an overhead horizontal I-beam, the Beam Trolley will effortlessly follow the user and is ideally suited for use with SRLs in general industry applications.

- Fits I-beams from 4" to 18" wide and up to 1¾" thick.
- Features aluminum crossbar, side plates and 360° swiveling D-ring.
- High density Nylacast wheels provide high continuous service temperature resistance and low moisture absorption rate.
- Stainless Steel wheel guards and fasteners plus sealed stainless steel wheel bearings.
- Features simple beam width adjustment with secondary locking detent pin.
- Weighs only 8½ lbs.

Material Specifications	
D-ring:	Aluminum Alloy; 5,000 lbs Min Static Strength
Crossbar:	Aluminum Alloy

Performance Specifications	
Static Strength:	5,000 lbs
Min Use Temperature:	10° Fahrenheit
ANSI Anchor Class:	Type D
ANSI User Capacity:	310 lbs or less
OSHA User Capacity:	425 lbs or less

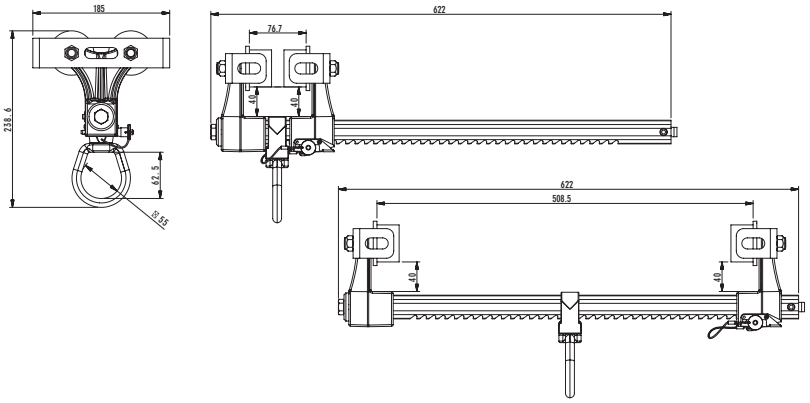

Relevant Standards	
ANSI	Z359.18-2017
OSHA	1926.502

WARNING!
All fall protection equipment should only be used after reading, understanding, and following the manufacturer's instructions in addition to receiving proper training. Failure to do so could result in serious injury or death.

Product descriptions and specifications herein may change without notice.

© 2018 **FallTech** 1306 S. Alameda St. Compton, CA 90221 **800-719-4619** **www.falltech.com**

FALLTECH®
Fall Protection. Precision Engineered.

09/2018